960W Three Phase Industrial DIN RAIL with PFC Function TDRT-960





■ Features:

- Three-Phase 340V-550VAC wide range input (Dual phase operation possible)
- Width only 110mm
- Built-in active PFC function compliance to BS EN/EN61000-3-2
- High efficiency 93% and low power dissipation
- Protections:Short circuit/Overload/Over voltage/Over temperature
- Cooling by free air convection
- Built-in constant current limiting circuit
- Can be installed on DIN rail TS-35/7.5 or 15
- Optional DC OK relay contact
- 2 years warranty

■ Applications

- Industrial control system
- Semiconductor fabrication equipment
- Factory automation
- Electro-mechanical apparatus

■ Description:

The TDRT-960 is a low-profile, DIN-rail-mountable 480W power supply designed for installation on TS-35/7.5 or TS-35/15 rails. With a compact width of 110mm, it is ideal for space-saving cabinet layouts. The entire series accepts a wide AC input range of 340VAC to 550VAC (capable of two-phase operation) and complies with the BS EN/EN61000-3-2 standard for harmonic current emissions specified by the European Union.

Featuring a metal casing for enhanced heat dissipation, the TDRT-960 achieves up to 93% efficiency. Under adequate air circulation, the series operates in ambient temperatures from -20°C to 70°C. It includes constant current mode overload protection, making it suitable for a wide variety of inductive or capacitive load applications.

■ Model Encoding

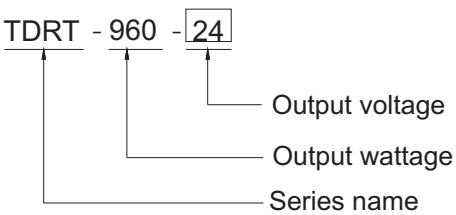

960W Three Phase Industrial DIN RAIL with PFC Function TDRT-960

Specifications

Model		TDRT-960-24	TDRT-960-48
Output	DC voltage	24V	48V
	Rated current	40A	20A
	Current range	0-40A	0-20A
	Rated power	960W	960W
	Ripple&noise	180mVp-p	250mVp-p
	Voltage ADJ.Range	24-28V	48V-55V
	Voltage tolerance	±1.0%	±1.0%
	Line regulation	±0.5%	±0.5%
	Load regulation	±1.0%	±1.0%
	Set up,rise time	1000ms100ms/400VAC 800ms,100ms/500VAC at full load	
	Hold up time	12ms/400VAC 14ms/500VAC at full load	
Input	Voltage range	Three-Phase 340V~550VAC wide range input(Dual phase operation possible) 480~780VDC	
	Frequency range	47~63Hz	
	Power factor(typ.)	PF=0.88/400VAC PF=0.86/500VAC at full load	
	Efficiency	93%	94%
	AC current(typ.)	2A/400VAC 1.4A/500VAC	
	Inrush current(typ.)	Cold start 60A	
	Leakage current	＜3.5mA/530VAC	
Protection	Overload	105%~130% rated output power	
		Protection type:Constant current limiting,unit will shut down after 3 sec.repower on to recover	
	Over voltage	29~33V	56~65V
		Protection type : Shut down o/p voltage, re-power on to recover	
	Over temperature	Shut down o/p voltage, recover automatically after temperature goes down	
Function	DC OK relay contact ratings(Max.)	60Vdc/0.3A, 30Vdc/1A, 30Vac/0.5A resistive load	
	Current Sharing	Please refer to function manual	
Environment	Working temperature note.5	-20℃～+70℃(Refer to "Derating Curve")	
	Working humidity	20-95% RH non-condensing	
	Storage temp,humidity	-40~+85℃， 10-90%RH	
	Temp.coefficient	±0.03%℃(0-50℃)	
	Vibration	Component:10 ~ 500Hz, 2G 10min./1cycle, 60min. each along X, Y, Z axes; Mounting: Compliance to IEC60068-2-6	
Safety & EMC	Safety standards	Refer to BS EN/EN62368-1	
	Withstand voltage	I/P-O/P:3KVAC I/P-FG:2KVAC O/P-FG:0.5KVAC,O/P-DC OK:0.5KVAC	
	Isolation resistance	I/P-O/P, I/P-FG, O/P-FG:＞100M Ohms / 500VDC / 25℃/ 70% RH	
	EMC emission	Refer to BS EN/EN55032 (CISPR32), BS EN/EN61204-3 Class B, BS EN/EN61000-3-2,-3	
	EMC immunity	Refer to BS EN/EN61000-4-2,3,4,5,6,8,11, BS EN/EN55024, BS EN/EN61000-6-2， BS EN/EN61204-3	
Others	MTBF	59.5K hrs min. MIL-HDBK-217F (25℃)	
	Size	110*125.2*150mm (W*H*D)	
	Packing	2.47Kg ; 6pcs/15.8Kg/1.47CUFT	
Note	1. All parameters NOT specially mentioned are measured at 400VAC , rated load and 25 of ambient temperat ℃ ure. 2. Ripple & noise are measured at 20MHz of bandwidth by using a 12" twisted pair-wire terminated with a 0.1uF & 47uF parallel capacitor. 3. Tolerance : includes set up tolerance, line regulation and load regulation. 4. Dual phase operation is allowed under certain derating to output load. 5. Installation clearances:40mm on top,20mm on the bottom,5mm on the left and right side are recommended when loaded permanently with full power. In case the adjacent device is a heat source,15mm clearance is recommended. 6. The power supply is considered as an independent unit, but the final equipment still need to re-confirm that the whole system complies with the EMC directives. 7. The ambient temperature derating of 3.5℃ /1000m with fanless models and of 5 ℃ /1000m with fan models for operating altitude higher than 2000m(6500ft).	

960W Three Phase Industrial DIN RAIL with PFC Function TDRT-960

Block Diagram

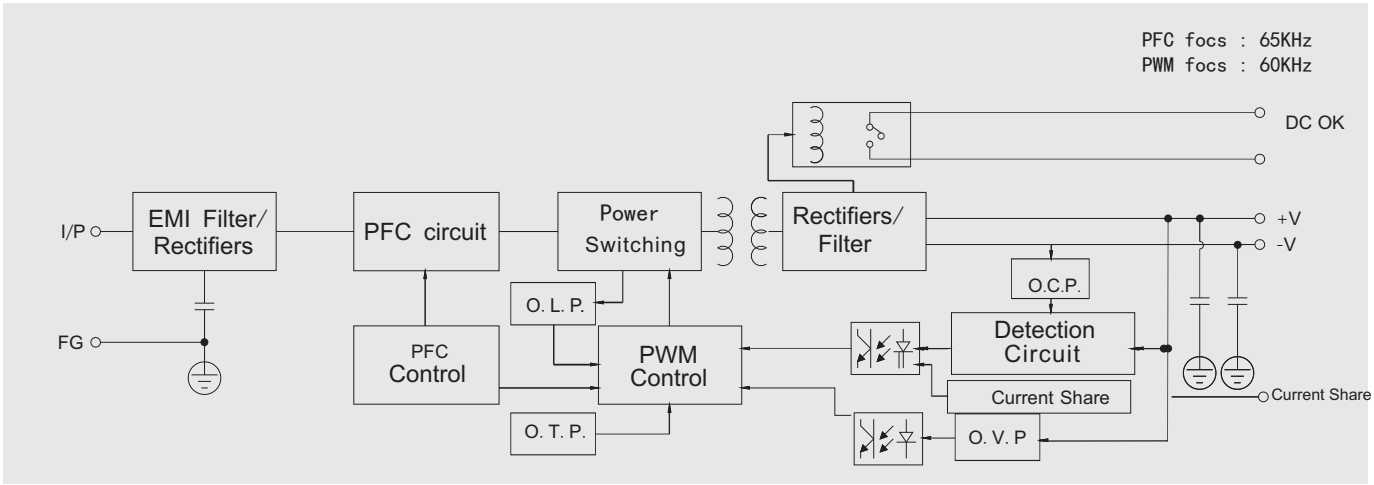

Derating Curve

Output derating VS input voltage

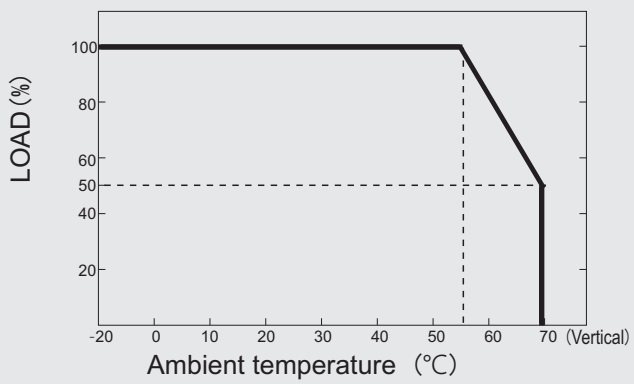

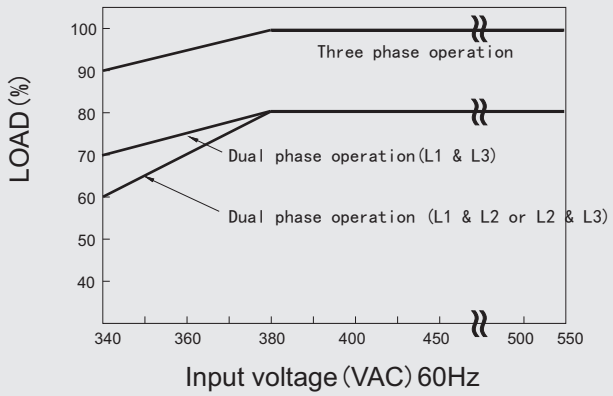

DC OK Relay Contact

Cantact Close	PSU turns on / DC OK.
Contact Open	PSU turns off / DC Fail.
Contact Rating (Max.)	60VDC/0.3A, 30VDC/1A, 30VAC/0.5A resistive load.

Control Pin (Optional) : DINKLEECH250R-02P or equivalent (CN25)

Pin No.	Assigment	Mating Housing	Wire Diamenter
1	P-(Current Share)	DinkleESC250V-04P or equivalent (Including in the package)	0.081~0.517mm² (20~28AWG)
2	P+(Current Share)		
3, 4	DC OK RelayContact		

480W Three Phase Industrial DIN RAIL with PFC Function TDRT-480

Mechanical Specification

(Unit: mm, tolerance ±1mm)

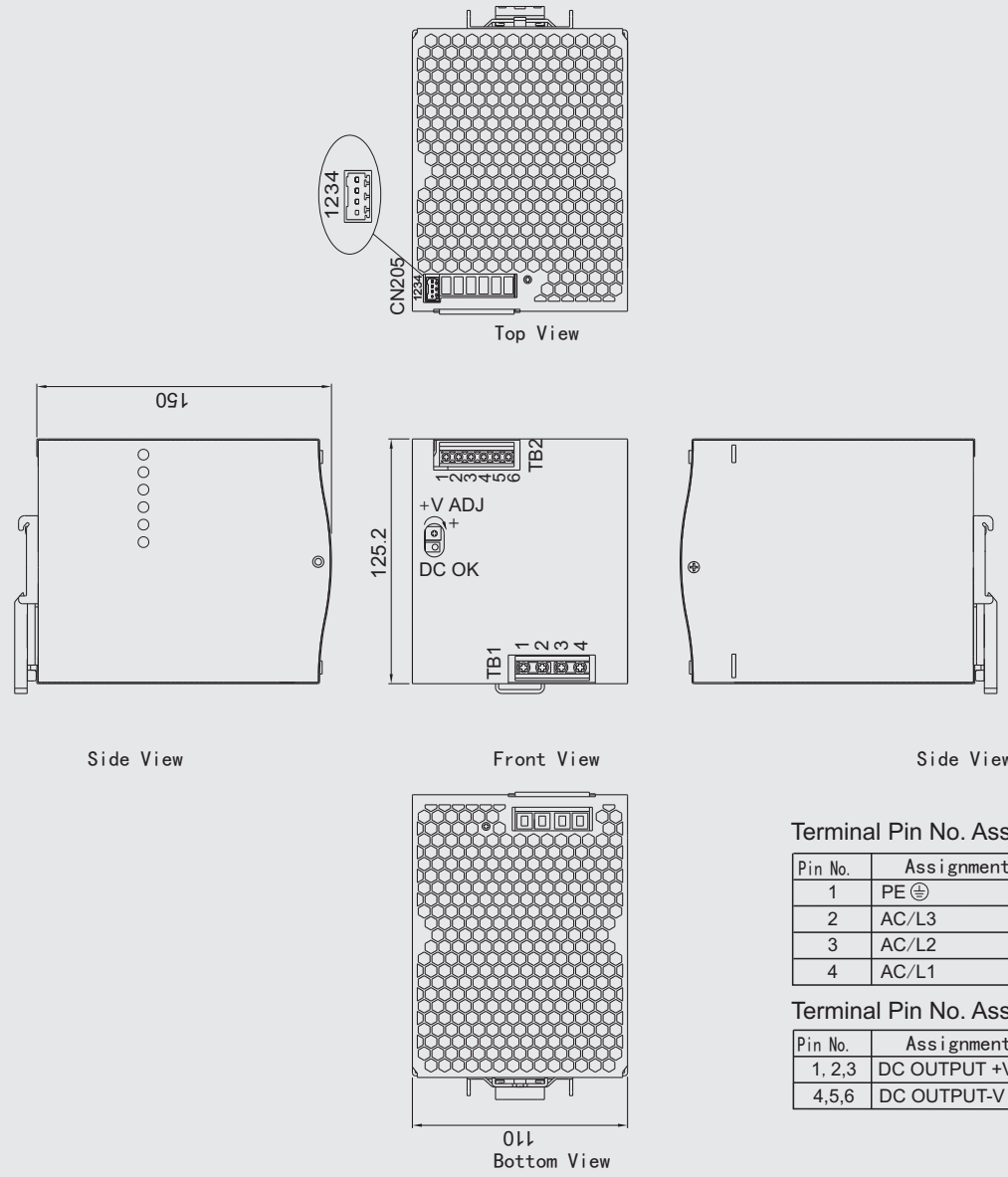

Terminal Pin No. Assignment (Tb1)

Pin No.	Assignment
1	PE ⏚
2	AC/L3
3	AC/L2
4	AC/L1

Terminal Pin No. Assignment (Tb2)

Pin No.	Assignment
1, 2,3	DC OUTPUT +V
4,5,6	DC OUTPUT-V

Installation Instruction

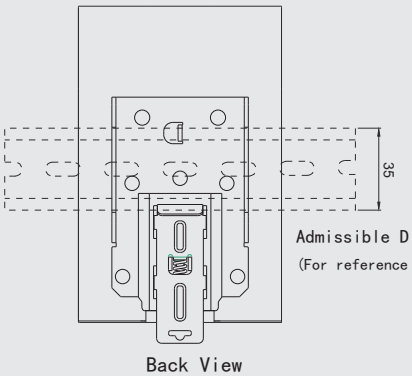

This series fits Din rail TS35/7.5 or TS35/15

Admissible Din Rail:TS35/7.5 or TS35/15
(For reference only.Not included with unit.)

480W Three Phase Industrial DIN RAIL with PFC Function TDRT-480

Function Manual

1. Current sharing

(1) Parallel operation is available by connecting the units shown as below (P+,P- are connected mutually in parallel).

(2) Difference of output voltages among parallel units should be less than 0.2V

(3)The total output current must not exceed the value determined by the following equation

(Output current at parallel operation)=(The rated current per unit) x (Number of unit) x 0.9

(4) In parallel operation 4 units is the maximum, please consult the manufacture for other applications.

(5) The power supplies should be paralleled using short and large diameter wiring and then connected to the load.

(6) When in parallel operation, the minimum output load should be greater than 5% of total output load.

(Min. load >5% rated current per unit x number of unit)

(7) In parallel connection, maybe only one unit (master) operate if the total output load is less than 5% of rated load condition.

The other PSUs (slaves) may go into standby mode and their output LEDs & relays will not turn on.

(8) Some minor noise may be heard at light load condition under parallel operation.

This is a normal phenomenon and the performance of the PSU will not be influenced.

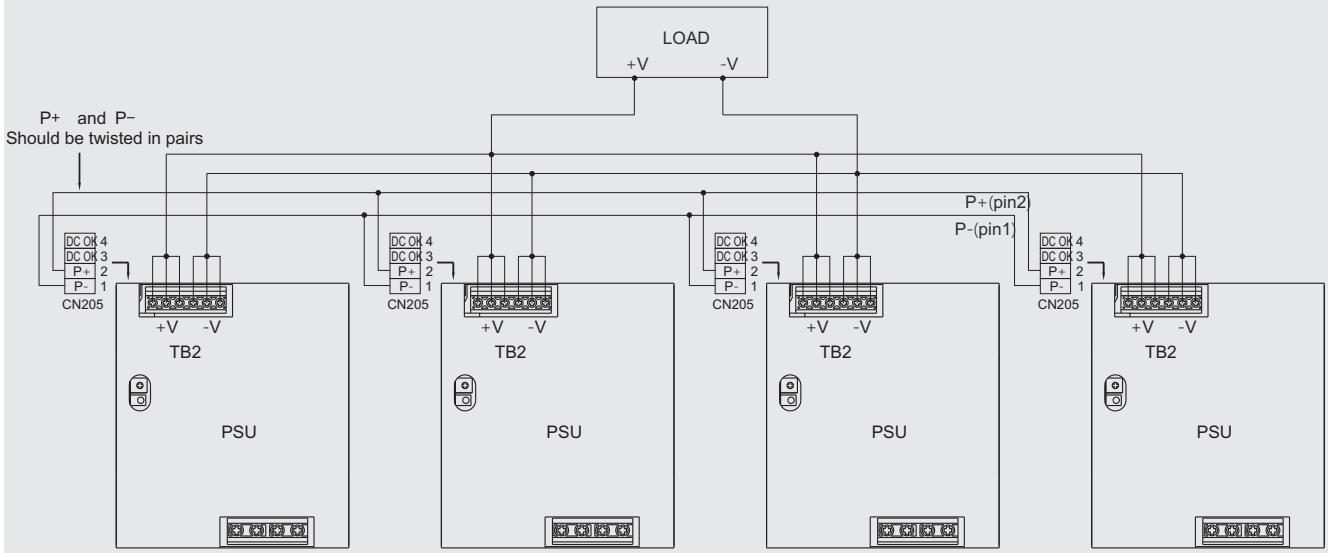

Http://www.smun.com TEL:0577-62657919 62900988