480W Three Phase Industrial DIN RAIL with PFC Function TDRT-480



Automate Industrial Security Network Telecom

■ Features:

- Three-Phase 340V-550VAC wide range input (Dual phase operation possible)
- Width only 85.5mm
- Built-in active PFC function compliance to BS EN/EN61000-3-2
- High efficiency 93% and low power dissipation
- Protections:Short circuit/Overload/Over voltage/Over temperature
- Cooling by free air convection
- Built-in constant current limiting circuit
- Can be installed on DIN rail TS-35/7.5 or 15
- Optional DC OK relay contact
- 2 years warranty

■ Applications

- Industrial control system
- Semiconductor fabrication equipment
- Factory automation
- Electro-mechanical apparatus

■ Description:

The TDRT-480 is a low-profile, DIN-rail-mountable 480W power supply designed for installation on TS-35/7.5 or TS-35/15 rails. With a compact width of 85.5mm, it is ideal for space-saving cabinet layouts. The entire series accepts a wide AC input range of 340VAC to 550VAC (capable of two-phase operation) and complies with the BS EN/EN61000-3-2 standard for harmonic current emissions specified by the European Union.

Featuring a metal casing for enhanced heat dissipation, the TDRT-480 achieves up to 93% efficiency. Under adequate air circulation, the series operates in ambient temperatures from -20°C to 70°C. It includes constant current mode overload protection, making it suitable for a wide variety of inductive or capacitive load applications.

■ Model Encoding

TDRT - 480 - 24

- 24 — Output voltage
- 480 — Output wattage
- TDRT — Series name

480W Three Phase Industrial DIN RAIL with PFC Function TDRT-480

Specifications

Model		TDRT-480-24		TDRT-480-48
Output	DC voltage	24V		48V
	Rated current	20A		10A
	Current range	0-20A		0-10A
	Rated power	480W		480W
	Ripple&noise	150mVp-p		150mVp-p
	Voltage ADJ.Range	24-28V		48V-55V
	Voltage tolerance	±1.0%		±1.0%
	Line regulation	±0.5%		±0.5%
	Load regulation	±1.0%		±1.0%
	Set up,rise time	1200ms,60ms/400VAC 800ms,60ms/500VAC at full load		
Input	Voltage range	Three-Phase 340V~550VAC wide range input(Dual phase operation possible) 480~780VDC		
	Frequency range	47~63Hz		
	Power factor(typ.)	PF=0.9/400VAC PF=0.88/500VAC at full load		
	Efficiency	91%		92%
	AC current(typ.)	0.85A/400VAC 0.7A/500VAC		
	Inrush current(typ.)	Cold start 50A		
	Leakage current	＜3.5mA/530VAC		
Protection	Overload	105%~130% rated output power		
		Protection type:Constant current limiting,unit will shut down after 3 sec.repower on to recover		
	Over voltage	29~33V		56~65V
		Protection type : Shut down o/p voltage, re-power on to recover		
	Over temperature	Shut down o/p voltage, recover automatically after temperature goes down		
Environment	Working temperature note.5	-20℃～+60℃(Refer to "Derating Curve")		
	Working humidity	20-95% RH non-condensing		
	Storage temp,humidity	-40~+85℃， 10-90%RH		
	Temp.coefficient	±0.03%℃(0-50℃)		
	Vibration	Component:10 ~ 500Hz, 2G 10min./1cycle, 60min. each along X, Y, Z axes; Mounting: Compliance to IEC60068-2-6		
Safety & EMC	Safety standards	Refer to IEC60950-1, BIS IS13252(Part1)(only for 24V),AS/NZS 62368.1,EAC TP TC 004, Design refer to BS EN/EN62368-1		
	Withstand voltage	I/P-O/P:3KVAC I/P-FG:1.5KVAC O/P-FG:0.5KVAC,O/P-DC OK(optional):0.5KVAC		
	Isolation resistance	I/P-O/P, I/P-FG, O/P-FG:＞100M Ohms / 500VDC / 25℃/ 70% RH		
	EMC emission (refer to)	Parameter	Standard	Test Level / Note
		Conducted	BS EN/EN55032(CISPR32) / BS EN/EN61204-3	Class B
		Radiated	BS EN/EN55032(CISPR32) / BS EN/EN61204-3	Class B
		Harmonic current	BS EN/EN61000-3-2	Class A
		Voltage Flicker	BS EN/EN61000-3-3	------
	EMC immunity (refer to)	BS EN/EN55035 , BS EN/EN61204-3		
		Parameter	Standard	Test Level /Note
		ESD	BS EN/EN61000-4-2	Level 4, 15KV air ; Level 4, 8KV contact
		Radiated Field	BS EN/EN61000-4-3	Level 3
		EFT/Burest	BS EN/EN61000-4-4	Level 3
		Surge	BS EN/EN61000-4-5	Level 4, 2KV / Line-Line, Level 4, 4KV/ Line-Earth
		Conducted	BS EN/EN61000-4-6	Level 3
		Magnetic Field	BS EN/EN61000-4-8	Level 4
		Voltage Dips and interruptions	BS EN/EN61000-4-11	＞95% dip 0.5 periods, 30% dip 25 periods 95% interruptions 250 periods
Others	MTBF	1174.0K hrs Telcordia SR-332(Bellcore) ; 108.3K hrs MIL-HDBK-217F (25℃)		
	Size	85.5*125.2*128.5mm (W*H*D)		
	Packing	1.51Kg; 8pcs/13Kg/1.16CUFT		
Note	1. All parameters NOT specially mentioned are measured at 400VAC , rated load and 25 of ambient temperat ℃ ure. 2. Ripple & noise are measured at 20MHz of bandwidth by using a 12" twisted pair-wire terminated with a 0.1uF & 47uF parallel capacitor. 3. Tolerance : includes set up tolerance, line regulation and load regulation. 4. Dual phase operation is allowed under certain derating to output load. 5. Installation clearances:40mm on top,20mm on the bottom,5mm on the left and right side are recommended when loaded permanently with full power 6. The power supply is considered as an independent unit, but the final equipment still need to re-confirm that the whole system complies with the EMC directives. For guidance on how to perform these EMC tests, please refer to “EMI testing of component power supplies.” 7. The ambient temperature derating of 3.5 /1000m with fanless models and of 5 /1000m with fan models for operating altitude highe ℃ ℃ r than 2000m(6500ft).			

480W Three Phase Industrial DIN RAIL with PFC Function TDRT-480

Block Diagram

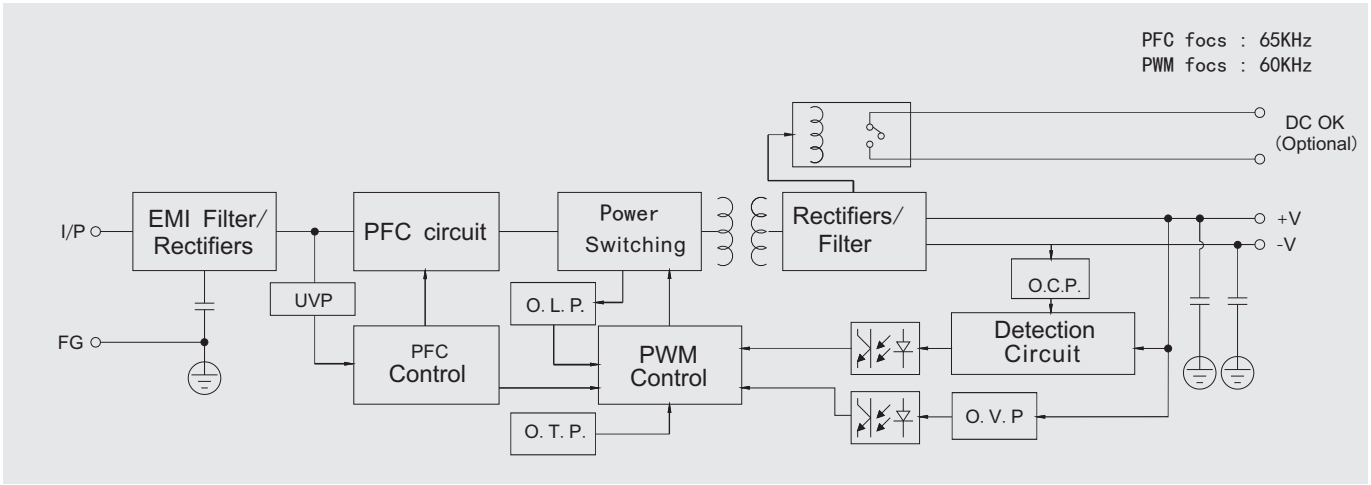

Derating Curve

Output derating VS input voltage

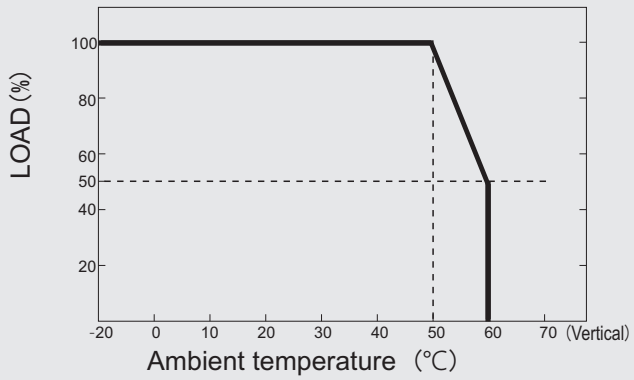

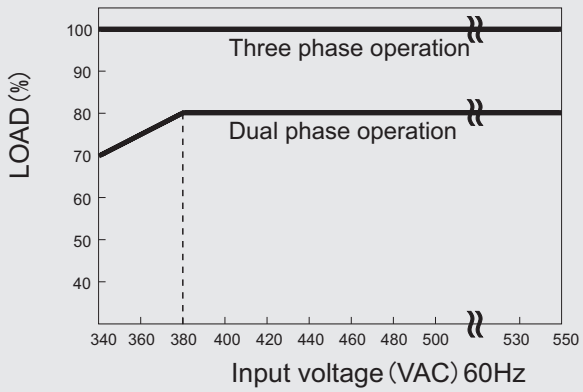

DC OK Relay Contact(Optional)

Cantact Close	PSU turns on / DC OK.
Contact Open	PSU turns off / DC Fail.
Contact Rating (Max.)	60VDC/0.3A, 30VDC/1A, 30VAC/0.5A resistive load.

Control Pin (Optional) : DINKLEECH250R-02P or equivalent (CN25)

Pin No.	Assigment	Mating Housing	Wire Diameter
1,2	DC OK RelayContact	DinkleE SC250V-02P or equivalent (Including in the package) 	0.081~0.517mm² (20~28AWG)

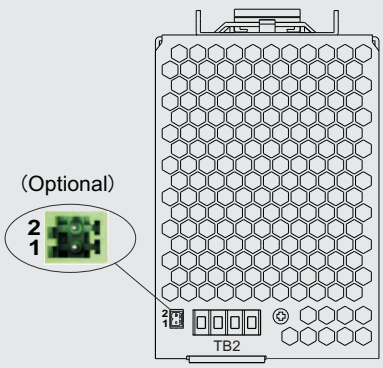

480W Three Phase Industrial DIN RAIL with PFC Function TDRT-480

Mechanical Specification

(Unit: mm, tolerance ±1mm)

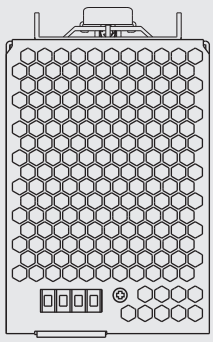

Top View

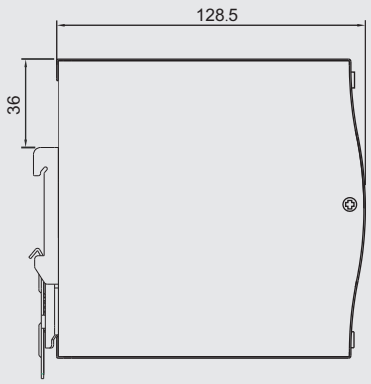

Side View

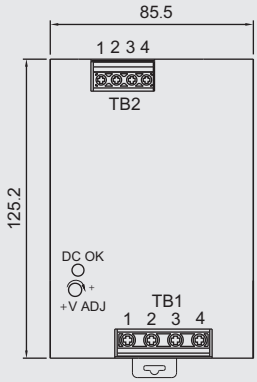

Front View

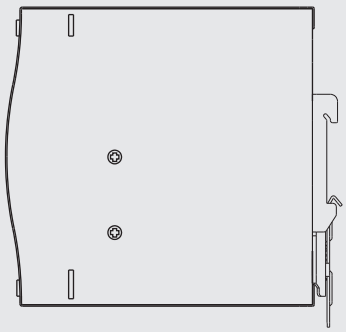

Side View

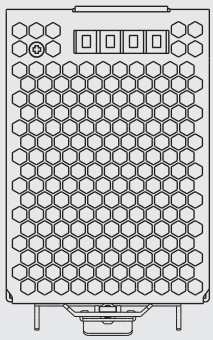

Bottom View

Terminal Pin No. Assignment (Tb1)

Pin No.	Assignment
1	PE ⏚
2	AC/L3
3	AC/L2
4	AC/L1

Terminal Pin No. Assignment (Tb2)

Pin No.	Assignment
1, 2	DC OUTPUT +V
3, 4	DC OUTPUT-V

Installation Instruction

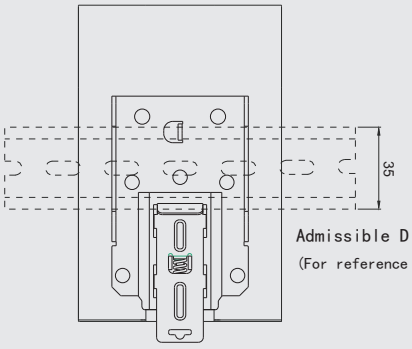

Admissible Din Rail:TS35/7.5 or TS35/15
(For reference only.Not included with unit.)

Back View

This series fits Din rail TS35/7.5 or TS35/15
For installation details,please refer to the installation manual